International Engineering Research Journal
Thermal design and CFD analysis of plate heat exchanger

Ashish S. Patil
*Student of M.E. (Heat Power), Pimpri-Chinchwad College of Engineering, Nigdi, Pune-44
Email: coolashish.patil1993@gmail.com

Sanjay P. Salve
*Department of mechanical engg, Pimpri-Chinchwad College of Engineering, Nigdi, Pune-44
Email: sanjay.salve@pccoepune.org

ABSTRACT

Heat exchanger is a device used in many engineering systems relatedto transfer of heat between two fluids in industrial applications. Plate Heat Exchanger (PHE) is a one of the important part of a condensing or evaporating system. In this study, heat transfer data will obtained for double phase flow (steam-to-water) configurations in a corrugated plate heat exchanger. The analytical calculation of heat transfer coefficient, Heat duty and pressure drop are validated with results of HTRI software. Heat duty from analytical calculation is 269.39kW, whereas from HTRI software value of heat duty is 271.9kW. In this work numerical simulation is also used to investigate heat transfer and pressure drop in plate heat exchanger with the intention of determining effect of channel geometry and flow condition of heat transfer in heat exchanger. The objective of this study is to explore the CFD tool to study the flow pattern, and of the heat transfer augmentation of furrows in corrugated walls, encountered in commercial plate heat exchangers (PHE).

Keywords— Heat Exchanger, Corrugated Plates, CFD, HTRI software.

I. INTRODUCTION

Heat exchangers are devices helps to transfer the heatfrom one fluid to other fluids at different temperatures. They improve efficiency of system, because the energy already within the system is used to transfer to another part of the system.Due to the growing urgency to save energy andto reduce overall environmental effects has placed greater emphasis on the use of heat exchangers having better thermal efficiency. In a PHE number of plates are arranged or pressed together with 180^0 rotation.Two fluids will flow through alternate channels to transfer heat to one another. Mainly there are four types of PHE: gasketed, welded, brazed, and semi-welded.Firstly Plate heat exchangers (PHE) were used in 1923 for milk pasteurization applications, but are now used in many applications in thewater heater, cooling tower isolation, heat pump, thermal storage system, recovery of waste heat,pharmaceutical, and health care sectors. Mainlythe PHE has unique advantages of flexible thermal design (plates can be added or removed to get different heat duty), easy cleaning, good temperature control (necessary in cryogenic applications), and better heat transfer performance.

Value of heat transfer coefficient for plate heat exchanger is 4000 to 7000 W/m^2 °C which is 4 times shell and tube heat exchanger [2], results in very compact equipment,RuoxuJia [2].

FockeW. et al. [1] established that Chevron angle affects the flow area of fluid, the usual range of being 25°-65°. The chevron angle between plate corrugations and the spacing between the plates are the majorparameters in the thermo hydraulic performance of plate heat exchangers.LMTD method is mostly preferred for design of plate type heat exchanger.

The variation of plate spacing affects to cross sectional area of channel, velocity of channel, equivalent diameter, and Reynolds number at hot and cold fluid sides in PHE. This further affects the pressure drop and pumping cost in PHE.So the spacing between is the significant parameter in design of plate heat exchanger.

Flow structure has strong dependency on plate geometry.

β<45° - cross flow

β>45° - helical flow

Xiaoyang et al. [1] experimented with the two-phase flow distribution in stacked PHEs at both vertical upward and downward flow orientations. They indicated that non-uniform distributions were found and that the flow distribution was strongly aff ected by the total inlet flow rate, the vapor quality, the flow channel orientation, and the geometry

Yan et al. reported that the mass flux, the vapor quality, and the condensation pressure aff ected the heat transfer coefficients and the pressure drops.

Wave design of corrugation pattern is mostly applicable for low Reynolds number. Chevron design is applicable for high Reynolds number. Reynolds number above 200 gives turbulent flow in PHE.(due to corrugation pattern).

II. DATA REDUCTION

The procedure for calculating heat transfer coefficient is given as follows

$T_{lm} = [(T_1 - t_2) - (T_2 - t_1)]/\ln[(T_1 - t_2)/(T_2 - t_1)]$

$A = Q/(U * T_{lm})$

$A_1p = L*W$

$N_p = A/A_1p$

$U = 1/(1/h_{hot} + 1/h_{cold} + k/t_p)$

HTC for cold side(boiling)

- $h_b = h_{cb} + h_{nb}$ (1)
- $h_{cb} = F_{tp} * h_l$ (2)
- $h_{nb} = F_c * h_{nb1}$ [4] (3)
- $F_{tp} = [(\frac{pr_l+1}{2}) * (\Phi_l{}^2)]^{nf}$ (4)

h_b – Boiling heat transfer coefficient(cold side)

h_{cb} – Convective boiling heat transfer coefficient

F_{tp} – Two phase convection factor

- $nf = 2.0 * (\frac{\rho_v}{\rho_l})^{0.25}$ (5)
- $Nu_l = j_{Nu} * Pr_l^{(\frac{1}{3})} * \left(\frac{\mu_l}{\mu_w}\right)^{0.17}$ (6)

n_f – Exponent term.

Nu_l – nusselt no based on j factor.

$$C_{gc} = \left(\frac{1}{G_c}\right) * \left[D_e * g * \rho_v * (\rho_l - \rho_v) * \left(\frac{1-y}{y}\right)\right]^{0.5} \quad (7)$$

- $y_{min} = 1/1 + \frac{(.5*G_c)^2}{D_e*g*\rho_v*(\rho_l-\rho_v)}$

C_{gc} – Channelflow regime parameter.

G_c – fluid velocity.

HTC for hot side (condensation)

$h_c = (1/U + 1/h_b + t_p/k_p)^{-1}$

$t_{sat} - t_{wall} = (U * T_{lm})/h_c$

$h_{hot} = 0.943[[\rho_l(\rho_l - \rho_c)\ g*h_{fg}*\ k_l{}^3]/[\ \mu l * l\ (t_{sat} - t_{wall})]]^{0:25}$

III. ANALYTICAL CALCULATION

For design of plate heat exchanger the LMTD method is one of preferable method.

Table 1

Inlet Parameters

Parameters	**Hot side**	**Cold side**
Mass flow rate(kg/h)	408	700
Temp(ºC)inlet/outlet	63.37/56.63	54/55.36

The hot side fluid is steam while cold side fluid is water. Steam is condensing by giving its latent heat to water with given mass flow rate.

Table 2

Calculation for HTC

Parameters	Value
Hot side HTC(W/m^2k)	26989.6
Cold side HTC(W/m^2k)	4493.16
Overall HTC(W/m^2k)	2978.34
Heat duty(kW)	269.39
Effective area of heat transfer(m^2)	16.8
No. of plates	46

The analytical calculation is done as given above for heat transfer coefficient of both sides(cold and hot). Mainly boiling heat transfer coefficient is depends on two phase convection factor.The heat duty from analytical calculation is 269.39 kW. So the effective area of heat transfer for given input parameters is 16.8 m^2. In this case no of plates are 46.

The heat transfer coefficient of cold side is also a function of heat transfer coefficient of hot side as well as overall heat transfer coefficient. Excel sheet is used for analytical calculation while HTRI software is used for validation of analytical calculation.

IV. HTRI RESULT

In this case design of plate heat exchanger is also done by using HTRI software. by considering the process parameters such as mass flow rate and temperature conditions calculation has carried out for heat transfer coefficient, which further gives the dimensionof the plate.

Again by considering values of table 1 calculation has carried using HTRI software.

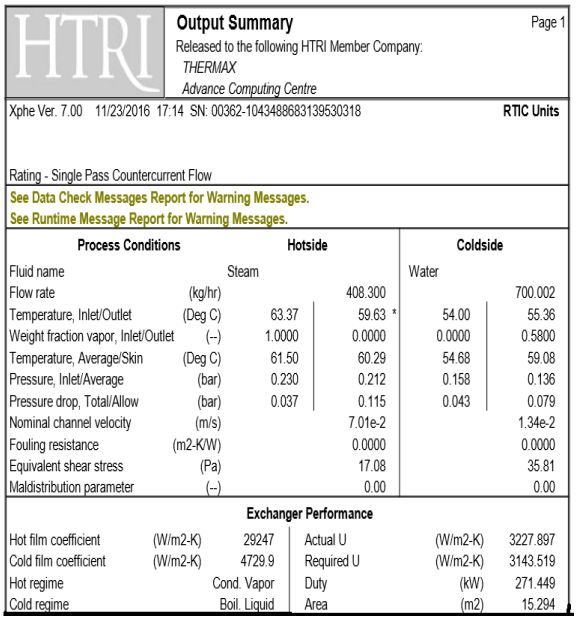

HTRI **Output Summary** Page 1

Released to the following HTRI Member Company:
THERMAX
Advance Computing Centre

Xphe Ver. 7.00 11/23/2016 17:14 SN: 00362-1043488683139530318 **RTIC Units**

Rating - Single Pass Countercurrent Flow

See Data Check Messages Report for Warning Messages.
See Runtime Message Report for Warning Messages.

Process Conditions		Hotside		Coldside	
Fluid name		Steam		Water	
Flow rate	(kg/hr)		408.300		700.002
Temperature, Inlet/Outlet	(Deg C)	63.37	59.63 *	54.00	55.36
Weight fraction vapor, Inlet/Outlet	(--)	1.0000	0.0000	0.0000	0.5800
Temperature, Average/Skin	(Deg C)	61.50	60.29	54.68	59.08
Pressure, Inlet/Average	(bar)	0.230	0.212	0.158	0.136
Pressure drop, Total/Allow	(bar)	0.037	0.115	0.043	0.079
Nominal channel velocity	(m/s)		7.01e-2		1.34e-2
Fouling resistance	(m2-K/W)		0.0000		0.0000
Equivalent shear stress	(Pa)		17.08		35.81
Maldistribution parameter	(--)		0.00		0.00

Exchanger Performance					
Hot film coefficient	(W/m2-K)	29247	Actual U	(W/m2-K)	3227.897
Cold film coefficient	(W/m2-K)	4729.9	Required U	(W/m2-K)	3143.519
Hot regime		Cond. Vapor	Duty	(kW)	271.449
Cold regime		Boil. Liquid	Area	(m2)	15.294

Fig.1 HTRI output result

The heat duty from analytical calculation is 269.39 kW where as from HTRI results are 271.49 kW.

From above figures we can be summarised that analytical results are in good agreement with HTRI results. The increase in the friction factor and the equivalent diameter, the decreasing of channel velocity at constant path length and fluid density make the cold and hot fluid plate pressure drop decrease

From above, the rises of plate spacing affects to channel cross sectional area, channel velocity, equivalent diameter, and Reynold number at hot and cold fluid sides in PHE.Increasing plate spacing, the flow area will increase, while velocity get reduces result in decreases of Reynolds number. The decreasingReynold number of cold and hot fluid increase the friction factor of cold and hot fluid.

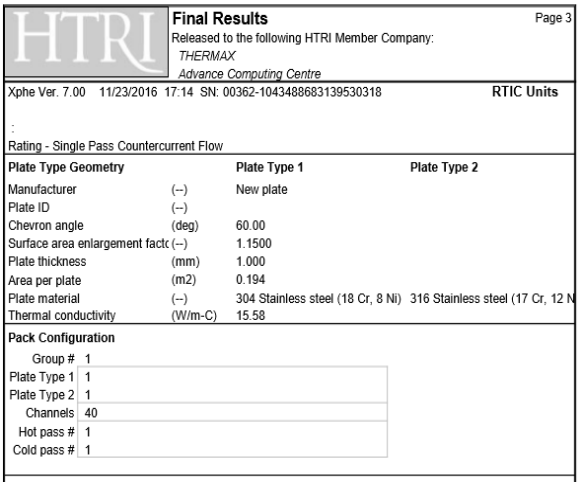

HTRI **Final Results** Page 3
Released to the following HTRI Member Company:
THERMAX
Advance Computing Centre

Xphe Ver. 7.00 11/23/2016 17:14 SN: 00362-1043488683139530318 **RTIC Units**

Rating - Single Pass Countercurrent Flow

Plate Type Geometry		**Plate Type 1**	**Plate Type 2**
Manufacturer	(--)	New plate	
Plate ID	(--)		
Chevron angle	(deg)	60.00	
Surface area enlargement facto	(--)	1.1500	
Plate thickness	(mm)	1.000	
Area per plate	(m2)	0.194	
Plate material	(--)	304 Stainless steel (18 Cr, 8 Ni)	316 Stainless steel (17 Cr, 12 N
Thermal conductivity	(W/m-C)	15.58	

Pack Configuration

Group #	1
Plate Type 1	1
Plate Type 2	1
Channels	40
Hot pass #	1
Cold pass #	1

Fig.2 HTRI output result

V. COMPUTATIONAL METHOD

For developing of computational domain parameters such as plate thickness, chevron angle, plate spacing, height and width of plate need to be considered. In this case plate spacing is 2 mm having geometry of 450*500 mm. three plates and two fluid bodies are considered as computational domain.

Assumptions for study

- The fluid is incompressible.
- The influence of buoyancy and gravity is negligible.
- Ignored thermal effectsgenerated by Viscous dissipation.

GEOMETRIC MODEL

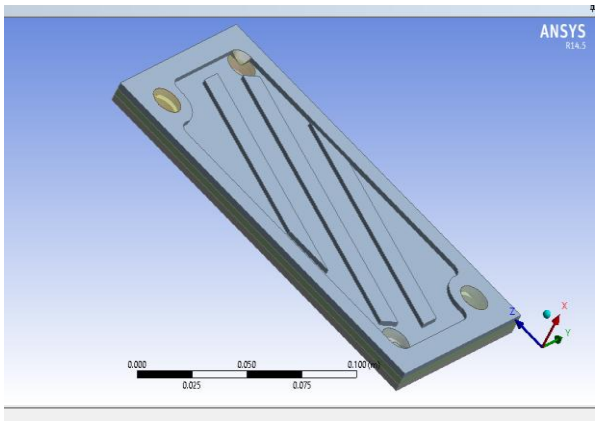

Fig.3 Geometric model of PHE.

In this case there are five layers have considered, 3 plates and 2 fluid bodies. Tetrahedral mesh is generated on geometric model as shown in fig below; this kind of mesh is applied due to corrugated structure of PHE. The unstructured tetrahedral mesh gives better quality near the boundary which employed below.

MESH

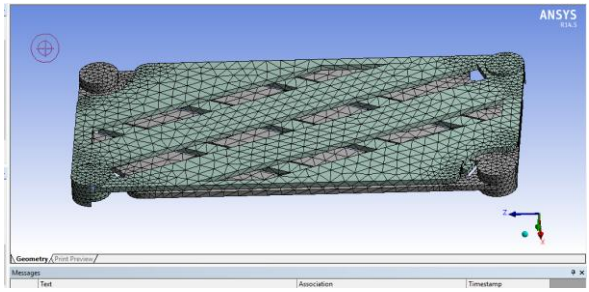

Fig.4 Meshing of fluid bodies

Because of limitation in computational power the small part (3 plates and 2 fluid bodies) PHE which considered as whole plate heat exchanger taken as a computational domain. Using mass flow condition, inlet temperature of cold and hot fluid was selected 80^0C and 35^0C. The pressure-outlet is used, and the outlet pressure of cold fluid and hot fluid is atmospheric pressure. The outer boundary condition is the no slip boundary condition, and the surface of the hotchannel and cold channel is set to the heat transfer surface. The remaining surface is set to the adiabatic boundary condition. The rest of boundary conditions can be defined by default.[6] Fig.4 above is shows the two fluids flowing inside PHE (main flow area) of plate-type heat exchanger in this study.

V. RESULT

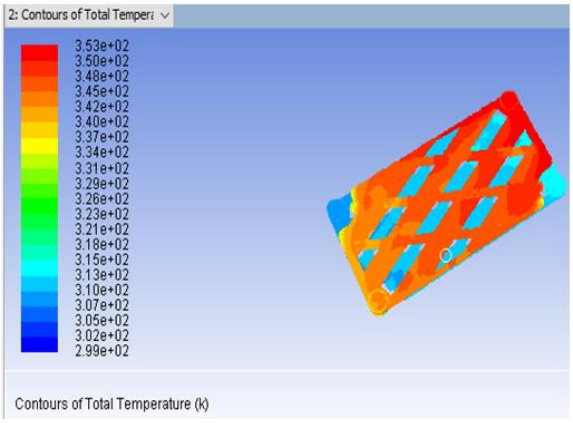

Fig.5 Hot fluid temp variation

It is observed that when laminar model was used.The solution gets converged only Reynolds no 200. So above this k-ε turbulence model needs to be used to get converged solution.

So from the simulation results we can see that outlet temperature of both fluids can be easily obtained. The LMTD can be find out and it helps to find out heat transfer coefficient for both sides (cold side and hot side)

Fig.2 shows the two fluid zones(hot water in red,cold water in blue) the fluid will flows through furrows of PHE(cross corrugated), having chevron angle 60^0 inlet temp of hot fluid is 353 K while outlet temp of hot fluid is 325K, and inlet temp of cold fluid is 308K outlet temp of cold fluid is 320 k.

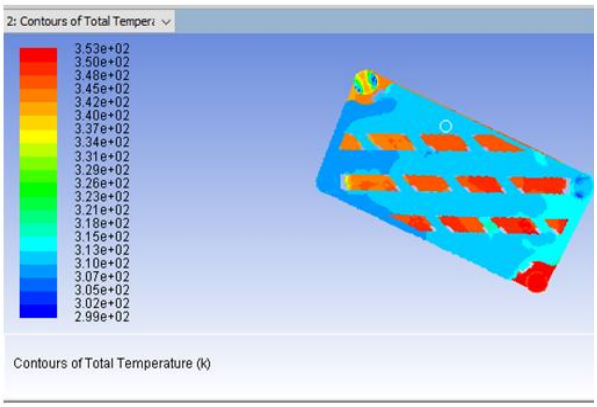

Fig.6 Cold fluid temp variation

From above figures (Fig.5)one can come to known the flow structure inside Plate heat exchanger.

Variation of temperature is takes place due to transfer of heat between two fluids through aluminium plate.

CONCLUSION

Analytical calculation shows, the pressure drop and heat transfer coefficient in plate heat exchanger and its dependency on geometry

Plate spacing variation affects the cross sectional area of channel,velocity of channel and equivalent diameter and Reynolds number at hot and cold fluid side of PHE.

The heat duty from analytical results gives 269.39 kW. While from HTRI results it gives value of 271.49 kW.

Increase in chevron angle results in increase of flow area, while velocity get reduces which results in decrease of Reynolds number.

The analytical calculation of PHE are in agreement with data obtained from HTRI software (overall heat transfer coefficient from analytical calculation is 2978 w/m^2k where as the HTRI software gives value as 3227 w/m^2k)

Although it is not possible to get heat transfer coefficient value directly from CFD results, we can easily calculate it from value of outlet temp from CFD results and validated with analytical calculation and with HTRI results.

REFERENCES

[1] DAFE EGEREGOR (2008) Numerical simulation of heat transfer and pressure drop in plate heat exchanger using fluent as a CFD tool, ISRN 2008-SE.

[2] NurRohmah, GhalyaPikra (2014) The effect of plate spacing in plate heat exchanger design as a condenser in organic Rankine cycle for low temperature heat source , Energy Procedia 68 (2015) 87 – 96

[3]RuoxuJia, Junling Hu,(2014) Analysis of a Counter Flow Parallel-plate Heat Exchanger, ASEE 2014

[4] Vishal R. Naik2013) Experimental Investigation of single phase Chevron Type Gasket Plate Heat Exchanger, (IJEAT)(2013)

[5] Talal M, (2013) Heat Transfer analysis of Corrugated plate heat exchanger review,Renewable energy journal.

[6]Athanasios G. Kanaris,(2006) Flow and Heat Transfer Prediction in a Corrugated Plate Heat Exchanger using a CFD Code, University of Thessaloniki, Greece.

[7] Manjunath H,(2013) Validation of Plate heat exchanger design using CFD, 2013 IJMERR

[8]DnyaneshwarB.Sapkal,(2015) Computer Aided Design CFD Analysis of Plate Heat Exchanger,International Journal of Innovative and Emerging Research in Engineering (2015),

NOMENCLATURE

Φ- Plate chevron angle (deg).

b- Plate spacing (mm).

F_{tp}- Two phase convection factor.

C_{gc}– Channel flow regime parameter.

h_{cb}– Convective boiling heat transfer coefficient.